CS1 JOYSTICK

The CS1 boasts an ultra compact and extremely rugged design that is ideal for applications requiring bang/bang and/or potentiometer outputs. Single and dual axis control is available as well as a variety of custom configurable handles and grips.



SPECIFICATIONS

GENERAL DATA

# of Axis	Single, Dual or Three* *Third axis is achieved via a twist handle function or thumbwheel.
Output Options	Microswitches, Potentiometers
Joystick Action	Spring Return or Friction Brake* *Friction brake limited to one output device per axis
Handle Travel	+/- 36 degrees each axis (standard) +/- 26 degrees each axis (optional)
Gate	Open or Cross
Max # of Steps	1-0-1
Handle Compatibility	Standard Handles, BH, RH, RHS, FG-3, FG-4, FG-5, MG1, MG2, MG9, MG13, MG27, TH30, G56, G58
Life	3-5 million cycles
Materials	Nickel chromium yoke, glass filled body.
Est. Shipping Weight	3 lbs.
Est. Shipping Dimensions	8 in. x 8 in. x 8 in.

MOUNTING DATA

Mounting Style	Drop-in or Panel (from below)
Mounting Footprint	2.84" x 2.84" Panel mount (standard) 3.78" x 3.78" Drop-in mount (required for fighter grip handles) See literature for additional mounting specifications

ENVIRONMENTAL DATA

IP Rating	IP54
Operating Temperature	-13 to +158 degrees F [-25 to +70 degrees C]
Storage Temperature	-40 to +158 degrees F [-40 to +70 degrees C]

ELECTRICAL DATA

Contact Specifications	Switch Type: SPDT (Form C) SS Series Microswitches (Proportional) SPDT (Form C) V Series Microswitches (Bang/Bang) Max. Number: Up to 4 per axis with potentiometer (Proportional) Up to 8 per axis without potentiometer (Proportional) Up to 2 per axis (Bang/Bang) Current Rating (AC): 5A (Proportional) 11A (Bang/Bang) Voltage Rating (AC): 250 (Proportional) 250 (Bang/Bang) Current Rating (DC): 6A (Bang/Bang) Voltage Rating (DC): 12 - 24 (Bang/Bang) Termination: .110 x .20" quick disconnect (5A Proportional) .187" x .20" male quick connect (11A Bang/Bang) Max. Wire Size: 18 AWG
Additional Specifications	Reference product literature for additional specifications

Technical Drawings

Dimensional

CS1 with a standard 2-piece handle, internal potentiometer and (2) 5A SPDT microswitches each axis

CS1 bang/bang with a round ball handle and 10A microswitches

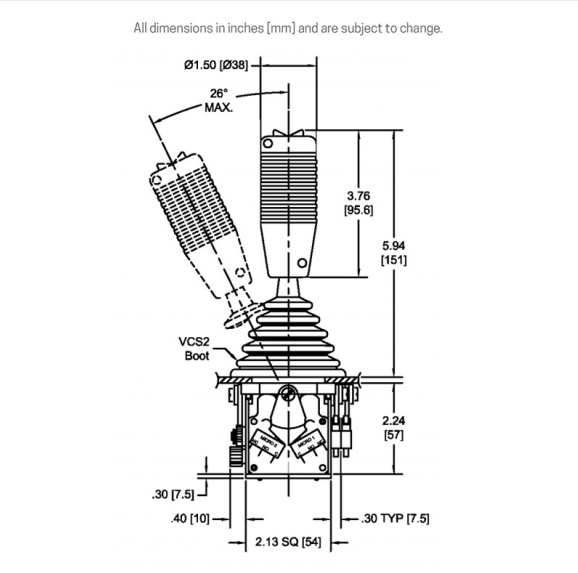

CS1 with an RHS rocker handle and internal potentiometer

Mounting

Panel mounting (mounts from below) with 1.89 inØ (48 mm) or 2.244 inØ (57 mm) center hole

Drop-in mounting (mounts from above) with 3.149 inØ (80 mm) center hole and adaptor plate