MG25 HANDLE

Compact palm handle with up to 6 push buttons.



SPECIFICATIONS

GENERAL DATA

Type	Palm
Specification Description	Compact palm handle with up to 6 push buttons.
Joystick Compatibility	VNSO, XL-VNSO, VCSO, VCS2, CS1

FEATURES AND FUNCTIONALITY

Push Buttons	✓
Rocker Switch	×
Thumbwheel	×
Handrest	×
Trigger	×
Operator Presence Switch	×
Mechanical Interlock	×
Twist	×
Capacitive Hand Detection Sensor	×

TECHNICAL DATA

Handle Height	4.2 in [108 mm]
Additional Specifications	Reference product literature for additional specifications

ENVIRONMENTAL DATA

IP Rating	IP56

Technical Drawings

Dimensional

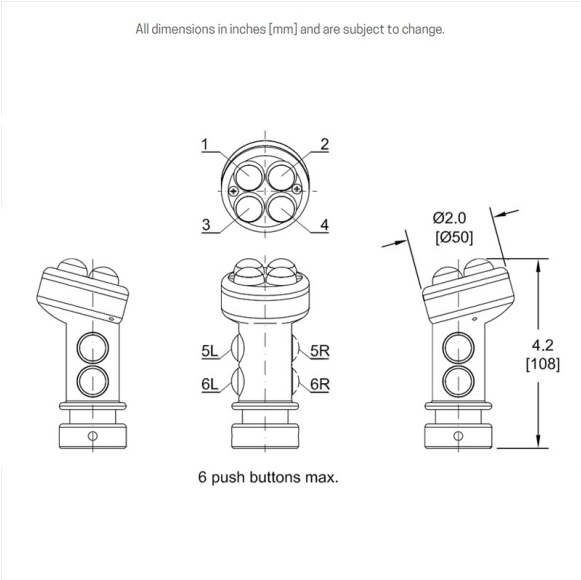

MG25 device locations & dimensions